GENERAL ELECTRIC

596C793 CONT OR SHEET SH NO

UNLESS OTHERWISE SPECIFIED USE THE FOLLOWING:—

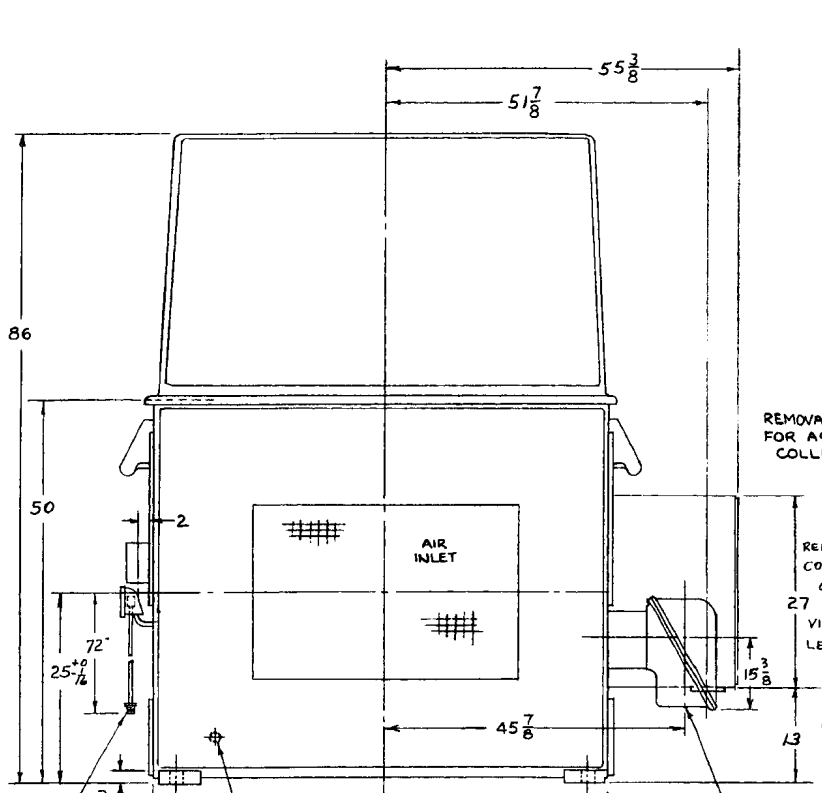
APPLIED PRACTICES	SURFACES	TOLERANCES ON MACHINED DIMENSIONS: FRACTIONS ±	DECIMALS ±	ANGLES ±
	✓			

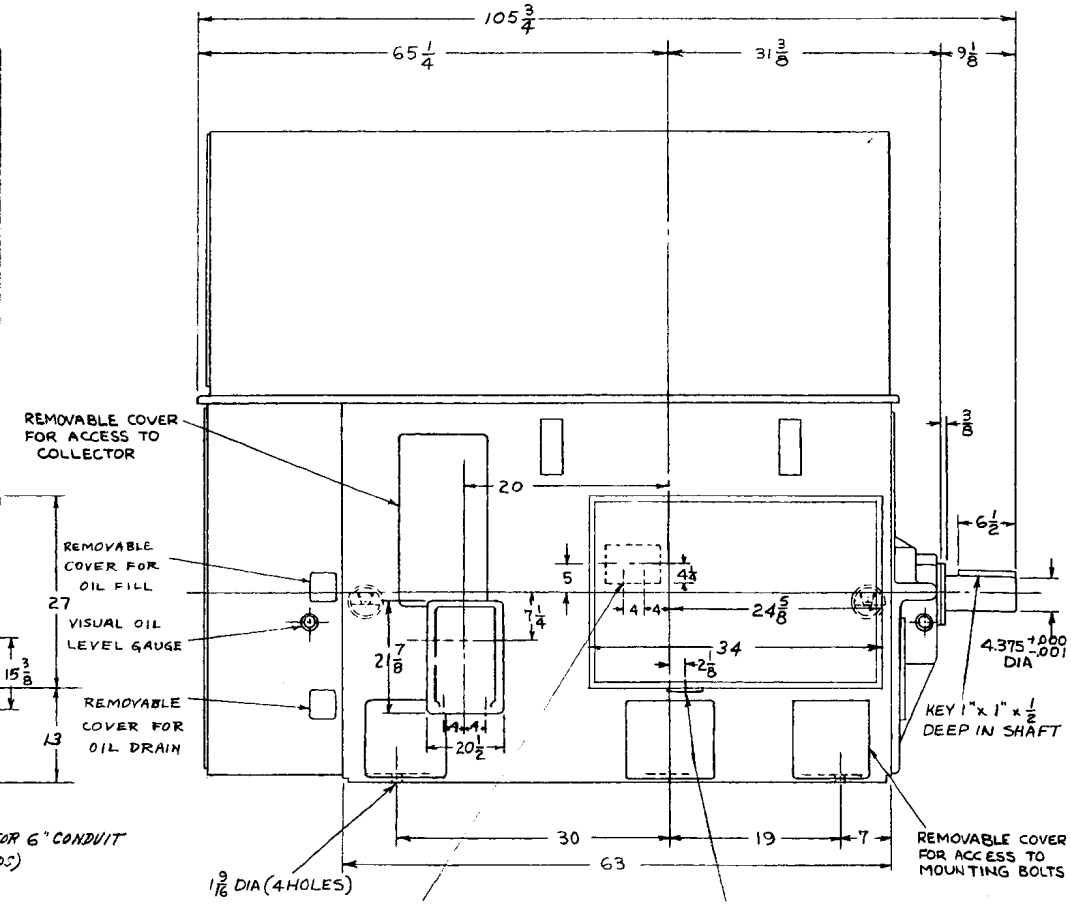
TITLE

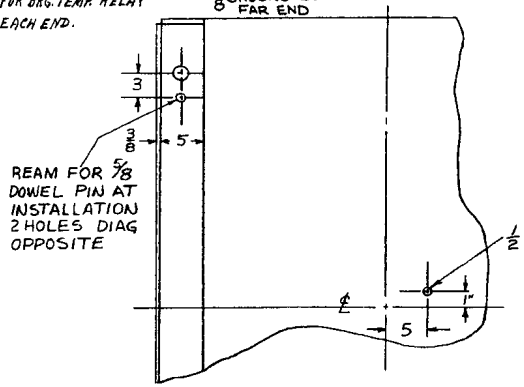
OUTLINE

FIRST MADE FOR 5M26354 API

RE 2391-37242 17.1







NOTE:
ROTOR CONDUIT BOX MAY BE ADJUSTED TO PERMIT ENTRANCE FROM TOP, BOTTOM OR ONE SIDE.
BEARING OPPOSITE DRIVE END IS INSULATED, ANY INSTRUMENT INSERTED INTO BEARING MUST BE INSULATED.

REVISIONS	PRINTS TO
6 C.Brandt June 2 1964 GEN. CHG. PER CUST. REQUEST. ADD OVERALL HT. & COUP. BOX	6/12
7 C.Brandt June 20 1965 CHG. ROTOR BOX [illegible]	6/18
8 C.Brandt June 15 1965 ADDED INS. F. BEARING BRG. NOTE.	

MADE BY J. Branham June 21, 1965 ISSUED

APPROVALS

L. G. & M. DIV OR DEPT

SCHENECTADY LOCATION

596C793 CONT OR SHEET SH NO

LO-7507

PF-205-PL 10-60 PRINTED IN U.S.A.