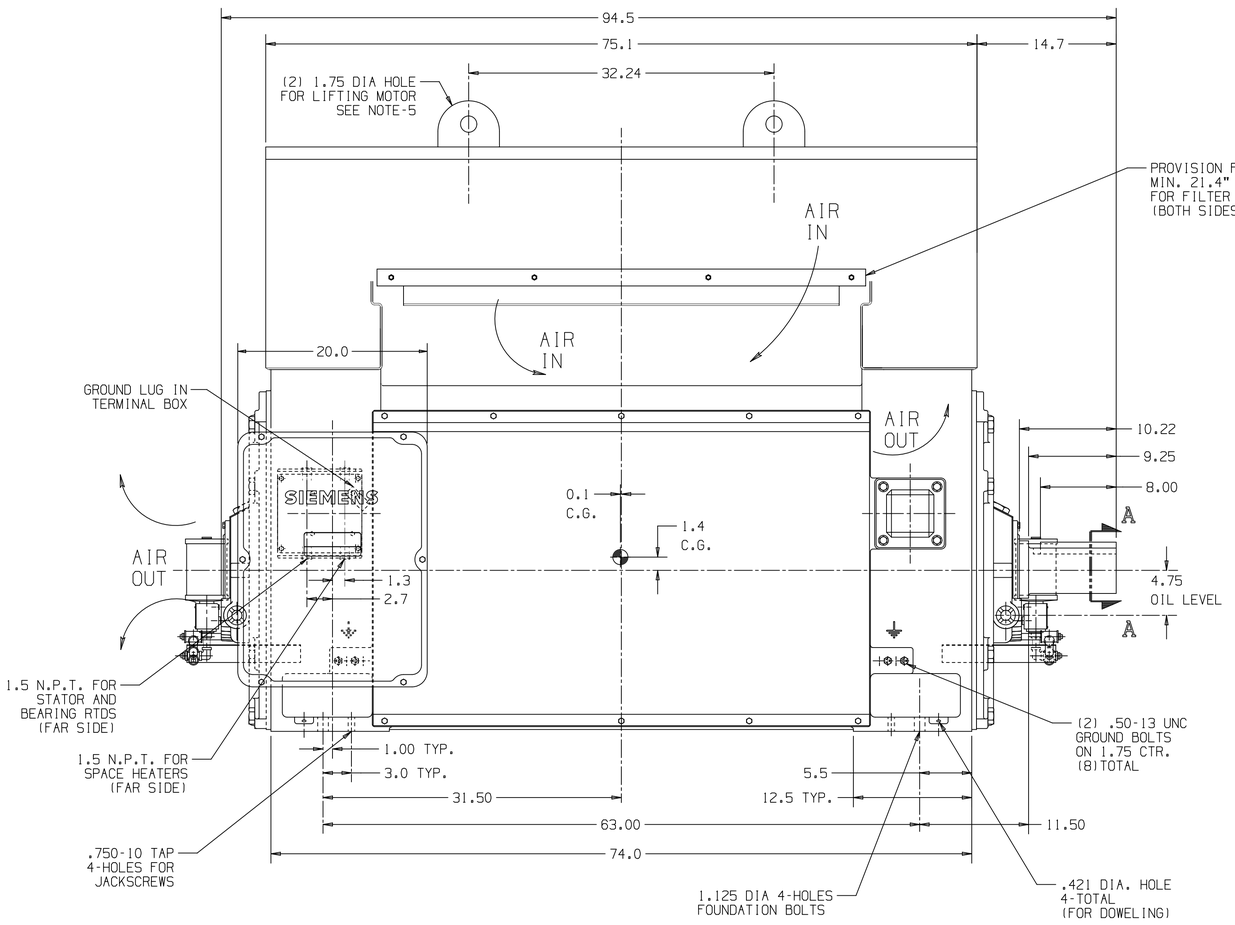
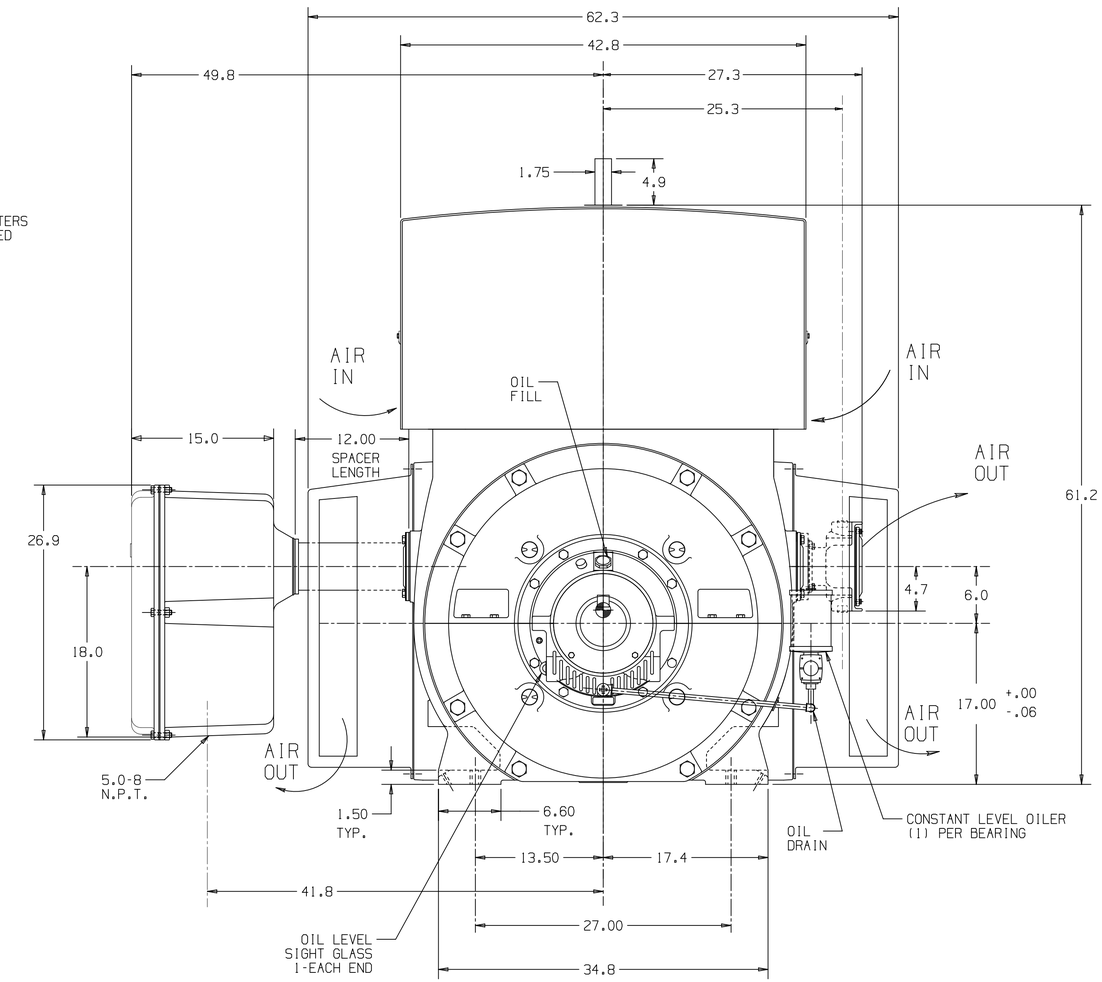
NOTES:
1. MAIN TERMINAL BOX IS ROTATABLE IN 90° INCREMENTS.
2. APPROXIMATE WEIGHT OF MOTOR: 14,700# APPROXIMATE WEIGHT OF ROTOR: 3,111#.
3. THIS MOTOR IS SUITABLE FOR DIRECT CONNECTION ONLY. SHIMS MAY BE NECESSARY UNDER MOTOR FEET FOR DIRECT CONNECTION.
4. THIS MOTOR IS SUITABLE FOR ROTATION IN EITHER DIRECTION.
5. NON-DRIVE END BEARING IS INSULATED, INSULATE ANY CONNECTIONS TO THIS BEARING.
6. WHEN LIFTING MOTOR, LIFT BY BOTH LIFTING LUGS AT THE SAME TIME. ALWAYS USE A SPEADER OF SIZE THAT RESULTS IN A VERTICAL LIFT AT EACH LIFT POINT.

MOTOR DATA:
ROTOR END FLOAT = .50"
END FLOAT OF LTD END FLOAT CPLG = .19"
OIL CAPACITY PER BEARING = 3.0 QT.
USE A HIGH QUALITY TURBINE OIL HAVING A VISCOSITY OF 300 TO 350 SUS @ 100°F (ISO VG 68)
MAXIMUM DIA. OF SHAFT LATHE CENTERS =1.39"
FOR SAFETY PROCEDURES AND ALIGNMENT REQUIREMENTS, SEE THE INSTRUCTION MANUAL.



SECTION A-A

ROTATION



SIEMENS
CERTIFIED PRINT
CUSTOMER INITIATED CHANGES MAY AFFECT PRICE AND DELIVERY
PRODUCTION WILL PROCEED ON THE BASIS OF THIS DRAWING

CUSTOMER	P.O.#	S.O.#
EAST COAST ELECTRIC	15994	3006136758-10

HP	RPM	FRAME	TYPE	VOLTS	PH	Hz
3000	1800	6813	CG11	2300/4000	3	60

CAD FORMAT REQUESTED: DWG ☒ DXF ☐ KAH

Tolerance	Surface	Material	Weight 0 / Scale inch
SIMILAR TO: A5E34358497A	Author Kellogg	OUTLINE_1RP2_H_6813_4_SB_F1_BI_C13	
	Creator 2016-08-29 Kellogg	.	
	Approval		
	Department DPD 2097		
	Change Order PSA00186574	MLFB	Doc Type TB / Z
	Doc State	Item No	Paper Size D
SIEMENS	Revision 001 Index RS AA	Doc No A5E39143104A	Tot Language / 2nd Language
©SIEMENS INDUSTRY INC 2013 - 2016	Project No	Ref No	Sheet 1 of 2

Weitergabe sowie Vervielfältigung dieser Zeichnung, Verwertung und Mitteilung ihres Inhalts nicht gestattet, soweit nicht ausdrücklich zugestanden. Zuwiderhandlungen verpflichten zu Schadenersatz. Alle Rechte für den Fall der Patenterteilung vorbehalten.
Reproduction, use or disclosure to third parties without express authority is strictly forbidden. Offenders will be liable for damages. All rights created by patent grant or registered design reserved.
Siemens s'engage à ne pas utiliser à des fins commerciales, à ne pas transmettre à des tiers et à ne pas reproduire sans autorisation écrite les informations techniques contenues dans ce document. Toute infraction à ces règles nous oblige à verser des dommages et intérêts. Nous nous réservons tous les droits découlant de la délivrance d'un brevet ou de l'enregistrement d'un modèle d'utilité ou d'un dessin ou modèle.
Leer | Bij het geel gestelde | Lees | Bij het groen gestelde | Lees | Bij het rood gestelde | Lees
Materiaal mag niet worden gebruikt.
Materiaal mag worden gebruikt.
Materiaal mag niet worden gebruikt.

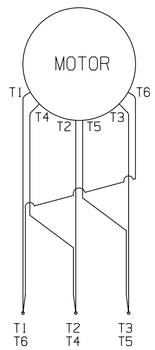
FOUNDATION LOADING	
LOADING CONDITIONS	*LOADING PER SIDE*
STATIC:	7350 lbs
RATED TORQUE:	7350 ± 3915 lbs
LOCKED ROTOR TORQUE:	7350 ± 3485 lbs
BREAK DOWN TORQUE:	7350 ± 8771 lbs
SHORT CIRCUIT TORQUE:	7350 ± 22651 lbs

RTD ALARM/SHUTDOWN DATA		
	ALARM	SHUTDOWN
STATOR	155°C	170°C
BEARING	100°C	105°C

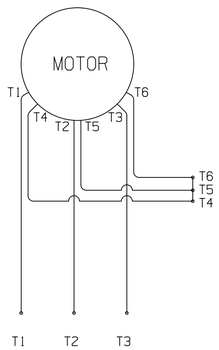
STATOR RTD
SLOT AND PHASE LOCATION

	SLOT	PHASE
PR1	1	A
PR2	13	C
PR3	25	B
PR4	37	A
PR5	49	C
PR6	61	B

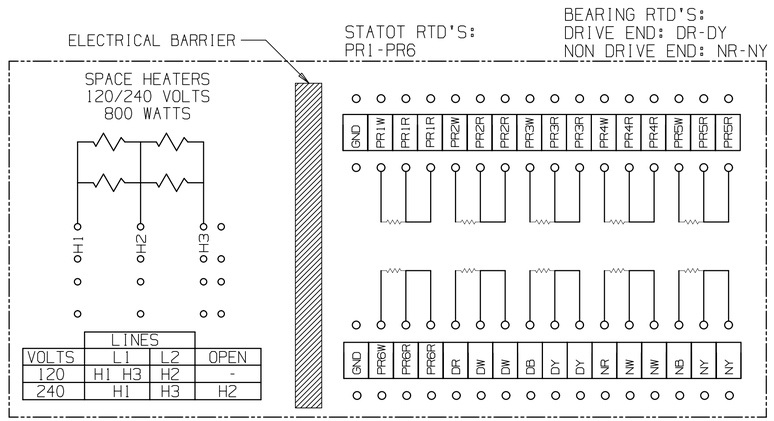
SLOT #1 IS IN 12 O'CLOCK POSITION. SLOTS COUNTED CLOCKWISE FACING CONN. END



MOTOR CONNECTION DIAGRAM
(LOW VOLTAGE)



MOTOR CONNECTION DIAGRAM
(HIGH VOLTAGE)



LINES			
VOLTS	L1	L2	OPEN
120	H1 H3	H2	-
240	H1	H3	H2

TERMINAL BOARD ARRANGEMENT IN AUXILIARY BOX FOR
SPACE HEATERS, 100 OHM STATOR AND BEARING RTDS

Weitergabe sowie Vervielfältigung dieser Dokumente, Verwertung und Mitteilung ihres Inhalts nicht erlaubt, soweit nicht ausdrücklich zugestanden. Zuwiderhandlungen verpflichten zu Schadenersatz. Alle Rechte für den Fall der Patenterteilung oder Gebrauchsmuster- oder Geschmacksmustereintragung vorbehalten.

Load it to your enterprise. The distribution, use and disclosure of this document is not permitted, unless expressly allowed. Violations oblige to damages. All rights reserved in the event of the grant of a patent or the registration of a utility model or design.

Transmitir y reproducir documentos, explotar su contenido y comunicarlo sin autorización expresa no están permitidos. Las infracciones obligan a indemnizar los daños causados. Nos reservamos todos los derechos.

Запрещается передача, копирование, использование и сообщение третьим лицам содержания настоящего документа без нашего прямого разрешения. Нарушение влечет за собой обязанность возмещения ущерба. Все права защищены.

SIEMENS
CERTIFIED PRINT
CUSTOMER INITIATED CHANGES MAY AFFECT PRICE AND DELIVERY
PRODUCTION WILL PROCEED ON THE BASIS OF THIS DRAWING

CUSTOMER	
	EAST COAST ELECTRIC
P.O.#	15994
S.O.#	3006136758-10

HP	RPM	FRAME	TYPE	VOLTS	PH	Hz
3000	1800	6813	CGII	2300/4000	3	60

CAD FORMAT REQUESTED: DWG ☒ DXF ☐ KAH

Tolerance	Surface	Material	Weight: 0 / Scale: inch
SIMILAR TO: A5E34358497A	Author: Kellogg	OUTLINE_1RP2_H_6813_4_SB_F1_BI_C13	
	Creator: 2016-08-29 Kellogg	.	
	Approval		
	Department: DFD 2097		
	Change Order: PSA00186574	Product: MLFB/Product-ID	Doc Type: TB / 2
	Doc State	Item No	Paper Size: D
	Revision (Counter): 001 Revision State: AA	Doc No: A5E39143104A	1st Language / 2nd Language
	Project No	Ref No	Sheet: 2 of 2

SIEMENS
© SIEMENS INDUSTRY INC 2013 - 2016

TB 002