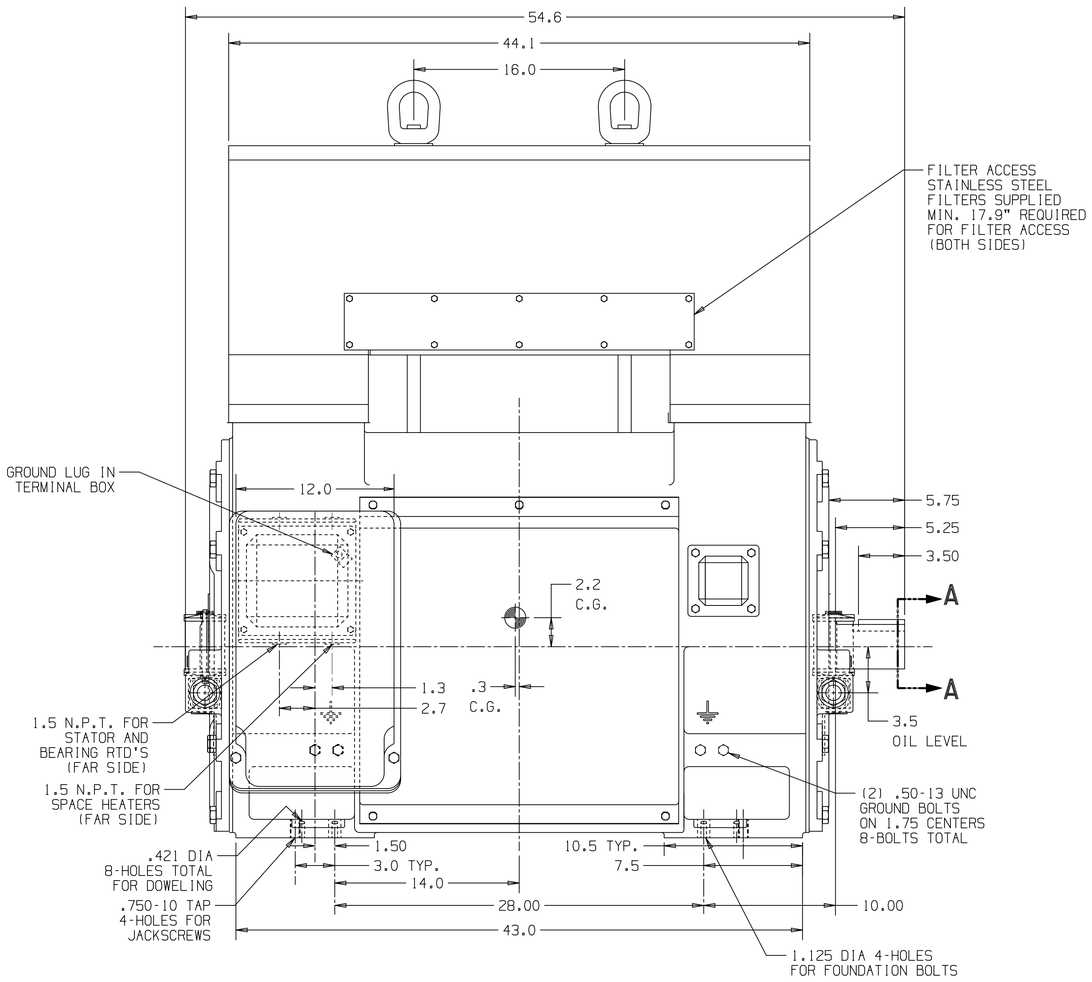
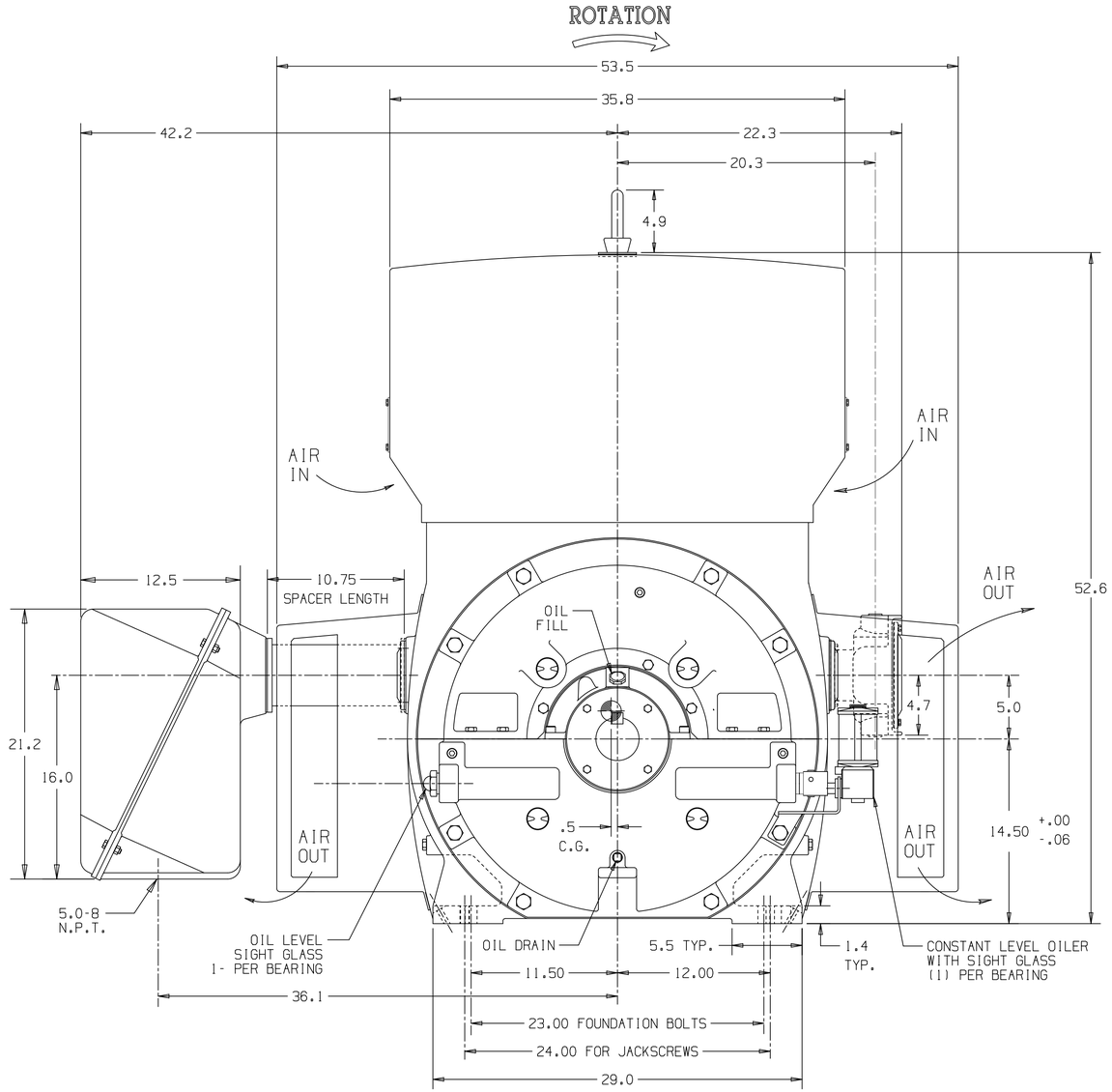
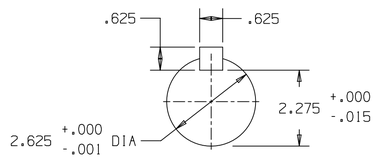
NOTES:
1. MAIN CONDUIT BOX MAY BE ROTATED IN STEPS OF 90°.
2. APPROXIMATE WEIGHT OF MOTOR: 5,300#
   APPROXIMATE WEIGHT OF ROTOR: 740#
3. THIS MOTOR IS SUITABLE FOR DIRECT CONNECTION ONLY.
   SHIMS MAY BE NECESSARY UNDER MOTOR FEET FOR DIRECT CONNECTION.
4. THIS MOTOR IS SUITABLE FOR ROTATION IN ONE DIRECTION.
   SEE DIRECTION ARROW ON THIS DRAWING AND ON MACHINE,
   OPERATION IN WRONG DIRECTION CAN CAUSE MACHINE OVERHEATING.
5. NON-DRIVE END BEARING IS INSULATED, INSULATE ANY CONNECTIONS TO THIS BEARING.
6. WHEN LIFTING MOTOR, LIFT BY BOTH LIFTING EYELETS AT THE SAME TIME. ALWAYS USE A SPREADER OF A SIZE THAT RESULTS IN A VERTICAL LIFT AT EACH LIFT POINT.

MOTOR DATA:
ROTOR END FLOAT = .50"
END FLOAT OF LTD END FLOAT CPLG = .19"
OIL CAPACITY PER BEARING = 3.5 QT.
USE A HIGH QUALITY TURBINE OIL HAVING A VISCOSITY OF 140 TO 160 SUS AT 100°F (ISO VG 32)
MAXIMUM DIA. OF SHAFT LATHE CENTERS =1.03"
FOR SAFETY PROCEDURES AND ALIGNMENT REQUIREMENTS, SEE THE INSTRUCTION MANUAL







SECTION A-A

SIEMENS
CERTIFIED PRINT
CUSTOMER INITIATED CHANGES MAY AFFECT PRICE AND DELIVERY
PRODUCTION WILL PROCEED ON THE BASIS OF THIS DRAWING

CUSTOMER: EAST COAST ELECTRICAL
P.O.#: 16038
S.O.#: 3006187718-30

HP	RPM	FRAME	TYPE	VOLTS	PH	Hz
900	3600	588Z	CGII	2300/4000	3	60

SIMILAR TO: A5E35320627A

CAD FORMAT REQUESTED: DWG [X] DXF [ ] KAH

SIEMENS

© SIEMENS INDUSTRY INC 2016

Tolerance | Surface | Material | Weight 0 | Scale inch

Author: Emery
Creator: 2016-10-25 Emery
Approval: see PDM see PDM
Department: NAM RC-US I DT LD APP OPS ENG
Change Order: PSA00186726
Doc State: see PDM
Revision: 001 Index RS: AA
Project No:

OUTLINE_1RP2_H_588_2_SB_F1_CW_CI2
MLFB | Doc Type: TB / MB
Item No | Paper Size: D
Doc No: A5E39565204A | 1st Language: en | 2nd Language: de
Ref No | Sheet: 1 of 2

Weitergabe sowie Vervielfältigung dieser Unterlage, Verwertung und Mitteilung ihres Inhalts nicht gestattet, soweit nicht ausdrücklich zugestanden. Zuwiderhandlungen verpflichten zu Schadenersatz. Alle Rechte für den Fall der Patenterteilung oder Gebrauchsmuster-eintragung vorbehalten.

Transmittal, reproduction, dissemination and/or editing of this document as well as utilization of its contents and communication thereof to others without express authorization are prohibited. Offenders will be held liable for payment of damages. All rights created by patent grant or registration of a utility model or design are reserved.

Siemens s'engage à protéger vos données personnelles. Nous traitons ces données conformément à la réglementation relative à la protection des données en vigueur. Pour en savoir plus, veuillez consulter notre déclaration de confidentialité.

Siemens se compromete a proteger sus datos personales. Procesamos estos datos de acuerdo con la normativa de protección de datos vigente. Para más información, consulte nuestra política de privacidad.

FOUNDATION LOADING

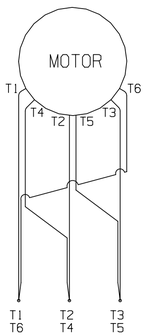
LOADING CONDITIONS	LOADING PER SIDE
STATIC:	2650 lbs
RATED TORQUE:	2650 ± 690 lbs
LOCKED ROTOR TORQUE:	2650 ± 545 lbs
BREAK DOWN TORQUE:	2650 ± 1532 lbs
SHORT CIRCUIT TORQUE:	2650 ± 3544 lbs

RTD ALARM/SHUTDOWN DATA		
	ALARM	SHUTDOWN
STATOR	155°C	170°C
BEARING	100°C	105°C

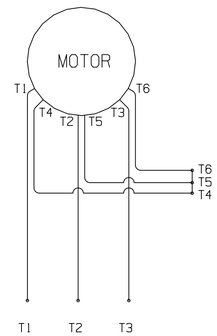
STATOR RTD
SLOT AND PHASE LOCATION

	SLOT	PHASE
PR1	1	A
PR2	9	C
PR3	17	B
PR4	25	A
PR5	33	C
PR6	41	B

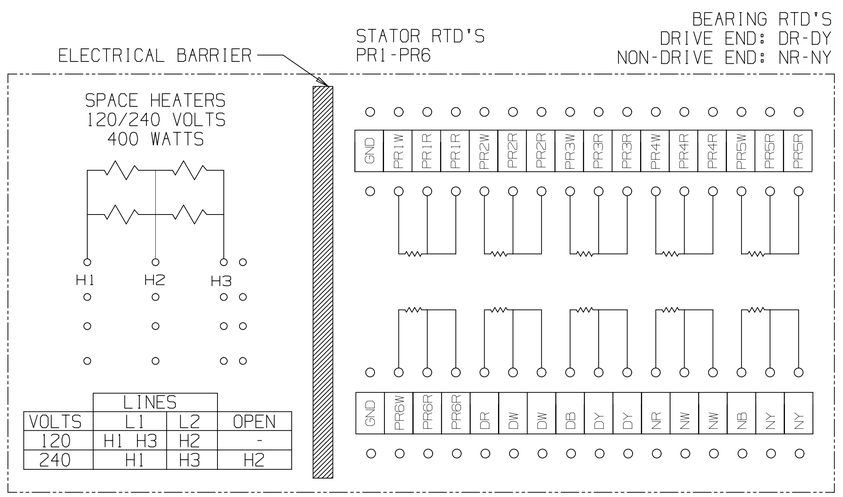
SLOT #1 IS IN 12 O'CLOCK POSITION. SLOTS COUNTED CLOCKWISE FACING CONN. END



MOTOR CONNECTION DIAGRAM
LOW VOLTAGE



MOTOR CONNECTION DIAGRAM
HIGH VOLTAGE



LINES			
VOLTS	L1	L2	OPEN
120	H1 H3	H2	-
240	H1	H3	H2

TERMINAL BOARD ARRANGEMENT IN AUXILIARY BOX
FOR SPACE HEATERS AND 100-OHM STATOR & BEARING RTD'S

Vervielfältigung sowie Verbreitung dieser Unterlage, Verwertung und Mitteilung ihres Inhalts nicht erlaubt, soweit nicht ausdrücklich zugestanden. Zuwiderhandlungen verpflichten zu Schadenersatz. Alle Rechte für den Patenterteilungs-, Gebrauchsmuster- oder Geschmacksmustereintragungsfall vorbehalten.

Reproduction and dissemination of this document as well as utilization of its contents and communication thereof to others without express authorization are prohibited. Offenders will be held liable for payment of damages. All rights created by patent grant or registration of a utility model or design are reserved.

Esta información y contenido de este documento no deben ser reproducidos, distribuidos ni comunicados a terceros sin autorización expresa. En caso contrario se obligará a indemnizar por los daños causados. Nos reservamos todos los derechos.

Ceci n'est qu'un exemple. Nous déclinons toute responsabilité quant à son utilisation. Tous droits réservés.

SIEMENS
CERTIFIED PRINT
CUSTOMER INITIATED CHANGES MAY AFFECT PRICE AND DELIVERY
PRODUCTION WILL PROCEED ON THE BASIS OF THIS DRAWING

CUSTOMER: EAST COAST ELECTRICAL
P.O.#: 16038
S.O.#: 3006187718-30

HP	RPM	FRAME	TYPE	VOLTS	PH	Hz
900	3600	588Z	CGII	2300/4000	3	60

Tolerance | Surface | Material | Weight: 0 | Scale: inch

SIMILAR TO: A5E35320627A

Author	Emery
Creator	2016-10-25 Emery
Approval	see PDM see PDM
Department	NAM RC-US I DT LD APP OPS ENG
Change Order	PSA00186726
Doc. State	see PDM
Revision	001 Index RS AA
Project No	

OUTLINE_1RP2_H_588_2_SB_F1_CW_C12
MLFB
Doc. Type: TB / MB
Paper Size: D
Item No
Doc. No: A5E39565204A
1st Language: en
2nd Language: de
Ref. No
Sheet: 2 of 2

SIEMENS
© SIEMENS INDUSTRY INC. 2016

CAD FORMAT REQUESTED: DWG [X] DXF [ ] KAH