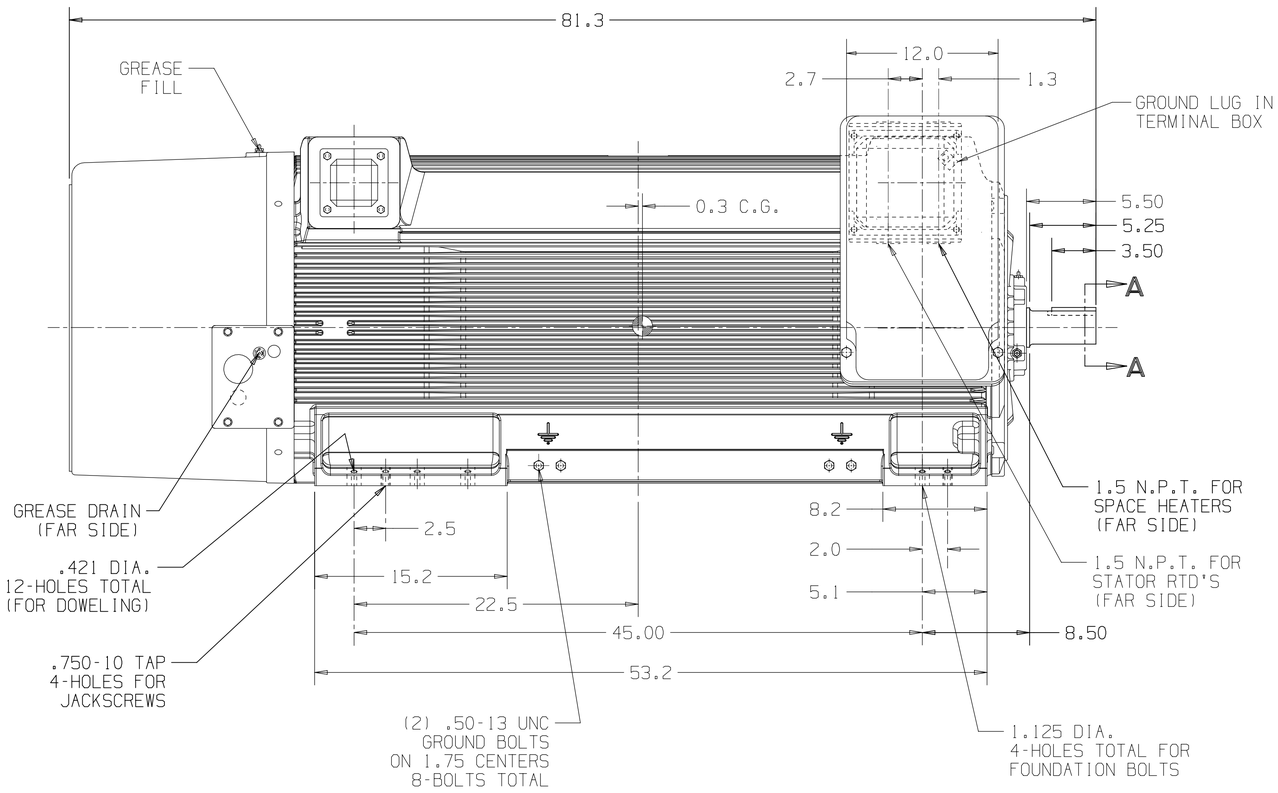
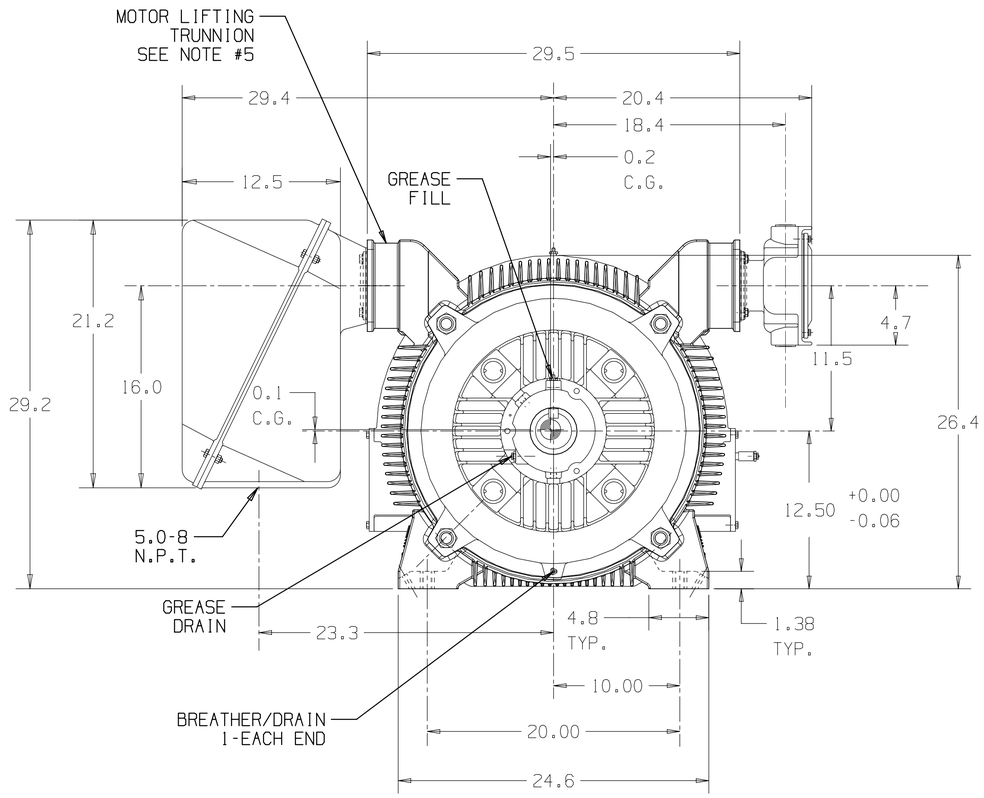
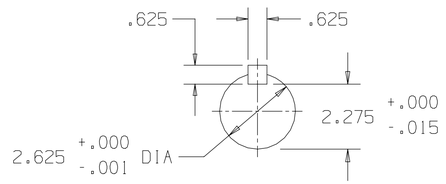
NOTES:
1. MAIN TERMINAL BOX IS ROTATABLE IN 90° INCREMENTS.
2. APPROXIMATE WEIGHT OF MOTOR: 6,375#
   APPROXIMATE WEIGHT OF ROTOR: 1,006#
3. THIS MOTOR IS SUITABLE FOR DIRECT CONNECTION ONLY.
   SHIMS MAY BE NECESSARY UNDER MOTOR FEET FOR DIRECT CONNECTION.
4. THIS MOTOR IS SUITABLE FOR ONE DIRECTION OF ROTATION ONLY. SEE ARROW ON THIS DRAWING AND ON MOTOR. OPERATION IN THE WRONG DIRECTION MAY RESULT IN OVERHEATING.
5. WHEN LIFTING MOTOR, LIFT BY TWO DIAGONALLY OPPOSITE TRUNNIONS AT THE SAME TIME.
6. FOR RELUBRICATION OF BEARINGS, SEE LUBRICATION PLATE ON MOTOR.
7. NON-DRIVE END BEARING IS INSULATED. INSULATE ANY CONNECTIONS TO THIS BEARING.
   BEARING SPECIFIED: DRIVE END: 6315 (75BC03J3)
   NON DRIVE END: 6215 (75BC02J3)
8. FOR SAFETY PROCEDURES AND ALIGNMENT REQUIREMENTS, SEE INSTRUCTION MANUAL.



ROTATION





SECTION A-A

SIEMENS

CERTIFIED PRINT

CUSTOMER INITIATED CHANGES MAY AFFECT PRICE AND DELIVERY
PRODUCTION WILL PROCEED ON THE BASIS OF THIS DRAWING

CUSTOMER: EAST COAST ELECTRICAL

P.O.#: 16789

S.O.#: 3006956676-10

HP	RPM	FRAME	TYPE	VOLTS	PH	Hz
800	3600	5013S	CMZ	2300/4000	3	60

CAD FORMAT REQUESTED: DWG [X] DXF [ ] KAH

Tolerance	Surface	Material	Weight 0 kg / Scale inch
SIMILAR TO ASE3801A200A	Author: Francis		OUTLINE_1LA2_H_5013_4_AF_F1_CW_C12
	Creator: 2018-01-15 Francis		
	Approval: 2018-01-16 Sucher		
	Department: PD LD AP MF-NOW EN BPE		
	Change Order: PSA0025814-3	MLFB	Doc Type: TB / MB
	Doc State: Released	Item No	Paper Size: D
SIEMENS	Revision: 001 Index: RS AA	Doc No: A5E43949996A	1st Language: en 2nd Language: de
©SIEMENS INDUSTRY INC 2016 - 2018	Project No	Ref No	Sheet: 1 of 2

Weitergabe sowie Vervielfältigung dieser Zeichnung, Verwertung und Mitteilung ihres Inhalts nicht erlaubt, soweit nicht ausdrücklich zugestanden. Zuwiderhandlungen verpflichten zu Schadenersatz. Alle Rechte für den Fall der Patenterteilung oder GM-Eintragung vorbehalten.

Copy of this document, giving rise to disclosure of its contents and communication thereof to others without express authorization is prohibited. Offenders are liable for payment of damages. All rights created by patent grant or registration of a utility model or design are reserved.

Reproduction et communication de ce document ainsi que l'utilisation et la communication de son contenu sont interdites, sauf autorisation expresse. Tout contrevenant est tenu à réparer le préjudice causé. Tous droits réservés en cas de délivrance d'un brevet, d'enregistrement d'un modèle d'utilité ou d'un dessin.

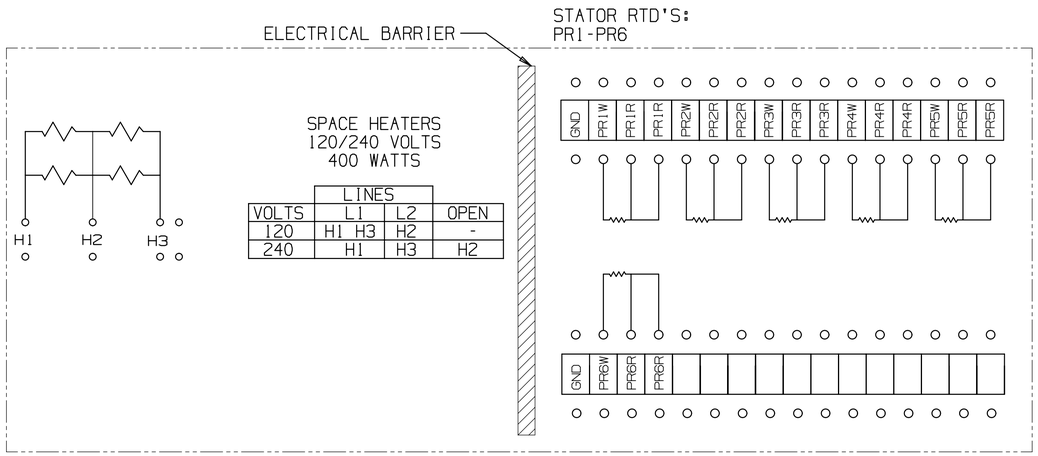
Este documento no puede ser reproducido ni comunicado a terceros. Su contenido no puede ser utilizado sin autorización expresa. Todo infractor queda obligado a reparar el daño causado. Reservados todos los derechos.

FOUNDATION LOADING		
LOADING CONDITIONS	*LOADING PER SIDE*	
STATIC:		3187.5 lbs
RATED TORQUE:	3187.5 ±	706 lbs
LOCKED ROTOR TORQUE:	3187.5 ±	586 lbs
BREAK DOWN TORQUE:	3187.5 ±	1363 lbs
SHORT CIRCUIT TORQUE:	3187.5 ±	3810 lbs

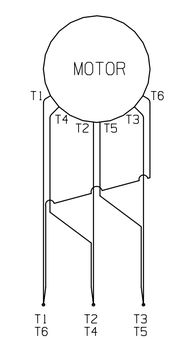
STATOR RTD
SLOT AND PHASE LOCATION

	SLOT	PHASE
PR1	1	A
PR2	9	B
PR3	17	C
PR4	25	A
PR5	33	B
PR6	41	C

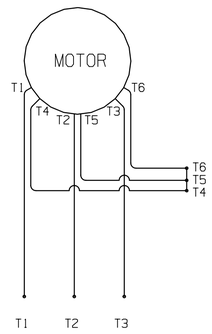
SLOT #1 IS IN 12 O'CLOCK POSITION. SLOTS COUNTED CLOCKWISE FACING CONN. END



TERMINAL BOARD ARRANGEMENT IN AUXILIARY BOX FOR SPACE HEATERS, AND 100 OHM STATOR RTD'S



LOW VOLTAGE
MOTOR CONNECTION
DIAGRAM



HIGH VOLTAGE
MOTOR CONNECTION
DIAGRAM

Weitergabe sowie Vervielfältigung dieser Unterlage, Verwertung und Mitteilung ihres Inhalts sind verboten, soweit nicht ausdrücklich gestattet. Zuwiderhandlungen verpflichten zu Schadenersatz. Alle Rechte für den Fall der Patenterteilung oder Gebrauchsmuster- oder Geschmacksmustereintragung vorbehalten.

Transmittal, reproduction, dissemination and/or editing of this document as well as utilization of its contents and communication thereof to others without express authorization are prohibited. Offenders will be held liable for payment of damages. All rights created by patent grant or registration of a utility model or design are reserved.

Reservados todos los derechos de esta documentación y de la información contenida en la misma. Queda prohibida su reproducción, comunicación a terceros, así como su explotación indebida, salvo autorización expresa. El incumplimiento de esta prohibición conlleva la obligación de indemnizar los daños causados. Nos reservamos todos los derechos.

Ceci vaut pour tout dépôt ou enregistrement.
Sous réserve de tous droits.
Sous réserve de modifications techniques.
Renvoyer après usage.

SIEMENS
CERTIFIED PRINT
CUSTOMER INITIATED CHANGES MAY AFFECT PRICE AND DELIVERY
PRODUCTION WILL PROCEED ON THE BASIS OF THIS DRAWING

CUSTOMER: EAST COAST ELECTRICAL
P.O.#: 16789
S.O.#: 3006956676-10

HP	RPM	FRAME	TYPE	VOLTS	PH	Hz
800	3600	5013S	CMZ	2300/4000	3	60

CAD FORMAT REQUESTED: DWG [X] DXF [ ] KAH

Tolerance	
Surface	
Material	
Weight	0 Kg
Scale	inch
SIMILAR TO	A5E38014200A
Author	Francis
Creator	2018-01-15 Francis
Approval	2018-01-16 Sucher
Department	PD LD AP MF-NOW EN BPE
Change Order	PSA0025814.3
Doc. State	Released
Revision	001 Index RS AA
Project No	
MLFB	
Item No	
Doc No	A5E43949996A
Ref No	
Doc Type	TB / MB
Paper Size	D
1st Language	en
2nd Language	de
Sheet	2 of 2
Drawing Title	OUTLINE_1LA2_H_5013_4_AF_F1_CW_C12

SIEMENS
©SIEMENS INDUSTRY INC. 2016 - 2018