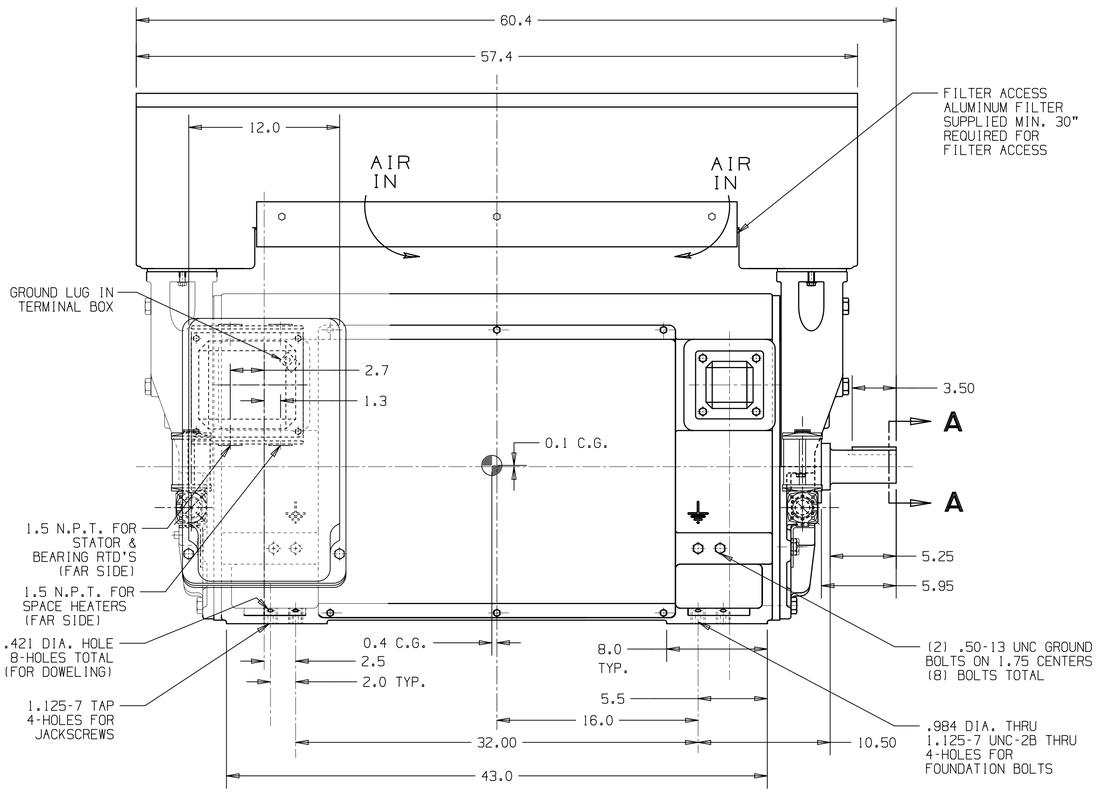
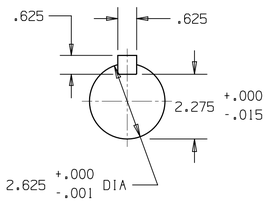
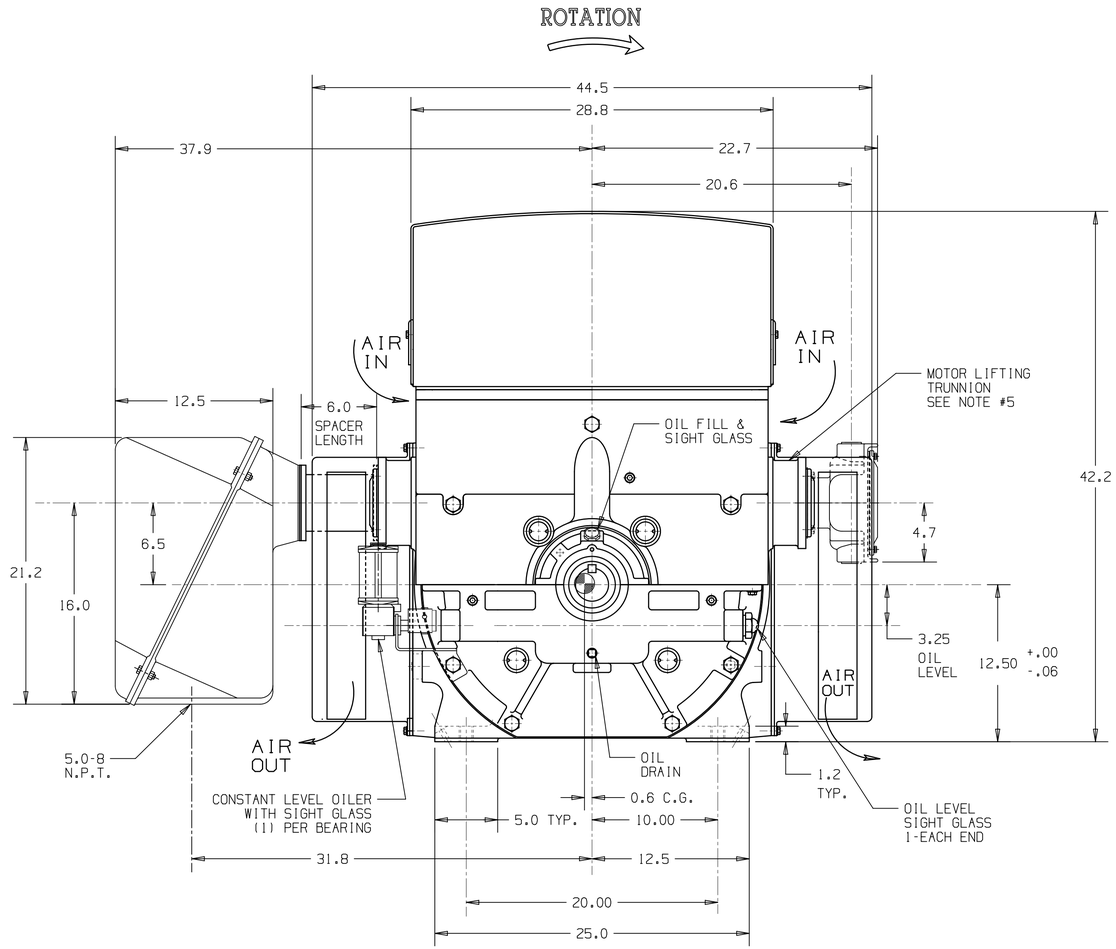
NOTES:
1. MAIN CONDUIT BOX MAY BE ROTATED IN STEPS OF 90° .
2. APPROXIMATE WEIGHT OF MOTOR: 5,150#.
   APPROXIMATE WEIGHT OF ROTOR: 614#.
3. THIS MOTOR IS SUITABLE FOR DIRECT CONNECTION ONLY.
4. THIS MOTOR IS SUITABLE FOR ROTATION IN ONE DIRECTION ONLY.
   SEE ROTATION ARROW ON THIS DRAWING AND ON MACHINE.
   OPERATION IN THE WRONG DIRECTION MAY CAUSE MACHINE OVERHEATING.
5. WHEN LIFTING MOTOR, LIFT BY TWO DIAGONALLY OPPOSITE TRUNNIONS AT THE SAME TIME. ALWAYS USE A SPREADER TO MAKE A VERTICAL LIFT AT THE TRUNNIONS AND PROTECT THE ENCLOSURE.
6. SHIMS MAY BE NECESSARY UNDER MOTOR FEET FOR DIRECT CONNECTION.
7. NON-DRIVE END BEARING IS INSULATED, INSULATE ANY CONNECTIONS TO THIS BEARING.

MOTOR DATA:
ROTOR END FLOAT = .50"
END FLOAT OF LTD END FLOAT CPLG = .19"
OIL CAPACITY PER BEARING = 1.4 QT.
USE A HIGH QUALITY TURBINE OIL HAVING A VISCOSITY OF 140 TO 160 SUS @ 100°F (ISO VG 32)
FOR SAFETY PROCEDURES AND ALIGNMENT REQUIREMENTS SEE THE INSTRUCTION MANUAL.





SECTION A-A



SIEMENS
CERTIFIED PRINT
CUSTOMER INITIATED CHANGES MAY AFFECT PRICE AND DELIVERY
PRODUCTION WILL PROCEED ON THE BASIS OF THIS DRAWING

CUSTOMER	EAST COAST ELECTRICAL
P.O.#	16038
S.O.#	3006187718-40

HP	RPM	FRAME	TYPE	VOLTS	PH	Hz
900	3600	5010S	CGII	2300/4000	3	60

TRI-RATED MOTOR:
800HP @ 1.15 SF
900HP @ 1.15 SF
1000HP @ 1.15 SF

CAD FORMAT REQUESTED: DWG ☒ DXF ☐ KAH

SIMILAR TO: A5E36590292A

SIEMENS

© SIEMENS INDUSTRY INC 2016

Tolerance	
Surface	
Material	
Weight	0
Scale	inch
Author	Emery
Creator	2016-12-19 Emery
Approval	see PDM see PDM
Department	NAM RC-US I DT LD APP OPS ENG
Change Order	PSA00186726
Doc State	see PDM
Revision	001 Index RS: AA
Project No	
Ref No	
Doc Type	TB / MB
Paper Size	D
1st Language	en
2nd Language	de
Sheet	1 of 2

OUTLINE_1RP2_H_5010_2_SB_F1_CW_C12

Item No
Doc No A5E40512256A
MLFB

Weitergabe sowie Vervielfältigung dieser Unterlage, Verwertung und Mitteilung ihres Inhalts nicht gestattet, soweit nicht ausdrücklich zugestanden. Zuwiderhandlungen verpflichten zu Schadenersatz. Alle Rechte für den Fall der Patenterteilung oder GM-Eintragung vorbehalten.

Copyright © Siemens AG 2016 All rights reserved. The reproduction, transmission or use of this document or its contents is not permitted without express written authority. Offenders will be liable for damages. All rights, including rights created by patent grant or registration of a utility model or design, are reserved.

Reproduction, modification and/or transfer to third parties without the prior written consent of Siemens is prohibited. Violations will be prosecuted and may result in liability for damages.

Toute reproduction, modification et/ou cession à des tiers sans l'autorisation écrite préalable de Siemens est interdite. Les contrevenants sont tenus à réparation. Tous droits réservés, notamment pour le cas de délivrance d'un brevet ou d'enregistrement d'un modèle d'utilité ou d'un dessin.

Se reproducir o copiar este documento, así como explotar o comunicar su contenido sin autorización expresa de Siemens, es ilícito y da lugar a responsabilidad por daños y perjuicios. Todos los derechos reservados, incluso en caso de concesión de patente o registro de modelo de utilidad o diseño.

Wij verbieden het overdragen en kopiëren van dit document, het gebruik en de mededeling van de inhoud ervan, tenzij dit uitdrukkelijk is toegestaan. Overtreding verplicht tot schadevergoeding. Alle rechten voorbehouden voor het geval dat een octrooi wordt verleend of dat een gebruiksmodel- of modelinschrijving plaatsvindt.

Det är förbjudet att vidarebefordra, kopiera och använda detta dokument samt att lämna ut dess innehåll till tredje man, om inte detta uttryckligen har medgivits. Överträdelser förpliktar till skadestånd. Alla rättigheter förbehålls för det fall att patent beviljas eller nyttighetsmodell eller formgivning registreras.

本文件及其中包含的信息，未经西门子公司书面许可，不得转发、复制、使用或泄露本文件或其中包含的信息。违反规定者将承担赔偿责任。保留一切权利，包括但不限于专利授权、实用新型或外观设计注册。

FOUNDATION LOADING	
LOADING CONDITIONS	*LOADING PER SIDE*
STATIC:	2575 lbs
RATED TORQUE:	2575 ± 795 lbs
LOCKED ROTOR TORQUE:	2575 ± 772 lbs
BREAK DOWN TORQUE:	2575 ± 1957 lbs
SHORT CIRCUIT TORQUE:	2575 ± 5015 lbs

RTD ALARM/SHUTDOWN DATA		
	ALARM	SHUTDOWN
STATOR	155°C	170°C
BEARING	100°C	105°C

STATOR RTD
SLOT AND PHASE LOCATION

	SLOT	PHASE
PR1	1	A
PR2	9	B
PR3	17	C
PR4	25	A
PR5	33	B
PR6	41	C

SLOT #1 IS IN 12 O'CLOCK POSITION. SLOTS COUNTED CLOCKWISE FACING CONN. END

MOTOR CONNECTION DIAGRAM
HIGH VOLTAGE

MOTOR CONNECTION DIAGRAM
LOW VOLTAGE

LINES			
VOLTS	L1	L2	OPEN
120	H1 H3	H2	-
240	H1	H3	H2

TERMINAL BOARD ARRANGEMENT IN AUXILIARY BOX
FOR SPACE HEATERS, 100-OHM STATOR & BEARING RTD'S

Weitergabe sowie Vervielfältigung dieser Unterlage, Verwertung und Mitteilung ihres Inhalts sind untersagt, soweit nicht ausdrücklich zugestanden. Zuwiderhandlungen verpflichten zu Schadenersatz. Alle Rechte für den Fall der Patenterteilung oder Gebrauchsmuster- oder Geschmacksmustereintragung vorbehalten.

Transmittal, reproduction, dissemination and/or editing of this document as well as utilization of its contents and communication thereof to others without express authorization are prohibited. Offenders will be held liable for payment of damages. All rights created by patent grant or registration of a utility model or design are reserved.

Lassen Sie es nicht dorthin, wo es nicht hingehört. Helfen Sie mit, Abfall zu vermeiden. Recyceln Sie dieses Produkt oder führen Sie es Ihrem Wertstoffsammelsystem zu.

SIEMENS
CERTIFIED PRINT
CUSTOMER INITIATED CHANGES MAY AFFECT PRICE AND DELIVERY
PRODUCTION WILL PROCEED ON THE BASIS OF THIS DRAWING

CUSTOMER: EAST COAST ELECTRICAL
P.O.#: 16038
S.O.#: 3006187718-40

HP	RPM	FRAME	TYPE	VOLTS	PH	Hz
900	3600	5010S	CGII	2300/4000	3	60

TRI-RATED MOTOR:
800HP @ 1.15 SF
900HP @ 1.15 SF
1000HP @ 1.15 SF

CAD FORMAT REQUESTED: DWG ☒ DXF ☐ KAH

SIMILAR TO: A5E36590292A

SIEMENS

© SIEMENS INDUSTRY INC 2016

Tolerance	
Surface	
Material	
Weight	0
Scale	inch
Author	Emery
Creator	2016-12-19 Emery
Approval	see PDM see PDM
Department	NAM RC-US I DT LD APP OPS ENG
Change Order	PSA0186726
Doc. State	see PDM
Revision	001 Index RS AA
Project No	
MLFB	
Item No	
Doc No	A5E40512256A
Ref No	
Doc. Type	TB / MB
Paper Size	D
1st Language	en
2nd Language	de
Sheet	2 of 2

OUTLINE_1RP2_H_5010_2_SB_F1_CW_C12